100/1000Base-T1-TX-L

Version	Description	Data
V10	First Released	2024/10/1
V11	Correct description	2025/03/10

1 Description

1.1 Overview

The BUELEC **100/1000Base-T1-TX-L** is a compact bidirectional physical layer converter designed for seamless interoperability between standard RJ45 Ethernet (100/1000Base-TX) and dual-wire automotive Ethernet (100/1000Base-T1). Compliant with the 100/1000BASE-T1 protocol, it ensures full compatibility with automotive Ethernet PHYs from leading vendors such as NXP, TI, Broadcom, Marvell, and Realtek. The device delivers zero packet loss, rock-solid connection stability, and ultra-low latency, making it ideal for diagnostic, testing, and integration applications in automotive networks.

Built on proven PHY solutions—Marvell 88Q2112 for 1 Gbps—the converter offers excellent performance and superior electromagnetic interference (EMI) resistance. It supports dual power inputs via 5.5 mm DC barrel jack (5–16 V for 100 Mbps; 5–36 V for 1 Gbps) and USB Type-C, with a rugged, sandblasted aluminum alloy enclosure measuring just 103 × 71 × 26 mm. Integrated status LEDs provide real-time feedback on link activity and data rates, while an onboard MCU enables automatic master/slave mode switching with reset and supports future firmware upgrades or secondary development.

Chipset Architecture

- **1 Gbps Mode**: Marvell 88Q2112 (T1 side) + Realtek RTL8211FI (TX side)
- Mature, field-proven silicon ensures reliable full-duplex operation at theoretical line-rate speeds in both directions.
- Onboard MCU facilitates secondary development and over-the-air firmware updates.

Power Supply

- Dual-input design: 5.5 × 2.1 mm DC jack + USB Type-C PD
- Wide input voltage tolerance with low-ripple, stable regulation.
- Enables flexible deployment in bench, in-vehicle, or portable diagnostic scenarios.

Mechanical Design

- Ultra-compact form factor: 103 mm (L) × 71 mm (W) × 26 mm (H)

- CNC-machined sandblasted aluminum alloy housing for durability and heat dissipation.

Connectivity Accessories

- Includes 1× TE Mate-NET port adapter board
- Includes 1× HMD-T port adapter board
- Provides plug-and-play compatibility with common automotive Ethernet header connectors for rapid prototyping and field deployment.

Automotive-Grade Performance Chip

- AEC-Q100 qualified chip Marvell 88Q2112 for reliable operation in automotive environments.
- Integrated OPEN Alliance TC10-compliant EMI filter helps suppress common-mode noise and supports signal integrity over unshielded twisted-pair cabling.

Human-Machine Interface

- **TX Side (RJ45)**: Pair of link/activity LEDs + speed indicator (100/1000 Mbps).
- **T1 Side (Twinax)**: Pair of link/activity LEDs + dedicated master/slave status LED; 1 Gbps variant includes Signal Quality Indicator (SQI) display.
- Intuitive visual feedback for rapid troubleshooting of connection health, negotiation mode, and signal integrity.

1.2 Features

- **Protocol Compliance**: Fully supports IEEE 802.3bw (1000BASE-T1) for automotive single-pair Ethernet and IEEE 802.3ab (1000BASE-T) for traditional Gigabit Ethernet, ensuring reliable data transmission in mixed-network setups.
- **High-Speed Performance**: Delivers 1 Gbps full-duplex transmission rates over both T1 (single twisted pair) and TX (RJ45) interfaces, with auto-negotiation for 100/1000 Mbps compatibility and low-latency forwarding.
- **Robust Protection**: Integrated over-voltage, over-current, and ESD (electrostatic discharge) protection safeguards against electrical surges and harsh conditions, exceeding standard automotive requirements.

- **Industrial-Grade Durability**: Engineered to industrial standards with wide operating temperature range (-40°C to +85°C), vibration resistance, and EMI shielding, making it suitable for demanding environments like vehicles, factories, and outdoor installations.
- **Advanced Networking Support**: Includes IEEE 802.1Q VLAN tagging for traffic segmentation, QoS prioritization, and enhanced security in multi-device ecosystems.
- **Plug-and-Play Design**: Compact form factor with standard T1 connector (e.g., Rosenberger H-MTD or equivalent) on one side and RJ45 port on the other; powered via PoDL (Power over Data Line) or external DC input for flexible deployment.

2 Hardware Manual

2.1 Specification

Items	Parameter	Description
Power Input	USB type-C	5V/2A
	DC Jack 5.5*2.1	5-36V (Comes with)
Product Size	LxWxH	103mm x 71mm x 26mm (4.1" x 2.8" x 1")
Product Weight	Kg	0.2
Product Case	Material	Aluminum alloy and sandblasted
Working Temperature	Degree	-45-85 Industrial
T1 Phy Chip	Marvell	88Q2112
Tx Phy Chip	REALTEK	RTL8211FI
Support OS	Windows,Linux,MacOs,Drivers free plug and play	
Support Device	PC,Notebook,ARM Board,Raspberry Pi,Jetson Nano,etc..	
UserGuide	Linux,Windows	

2.2 Hardware Interface

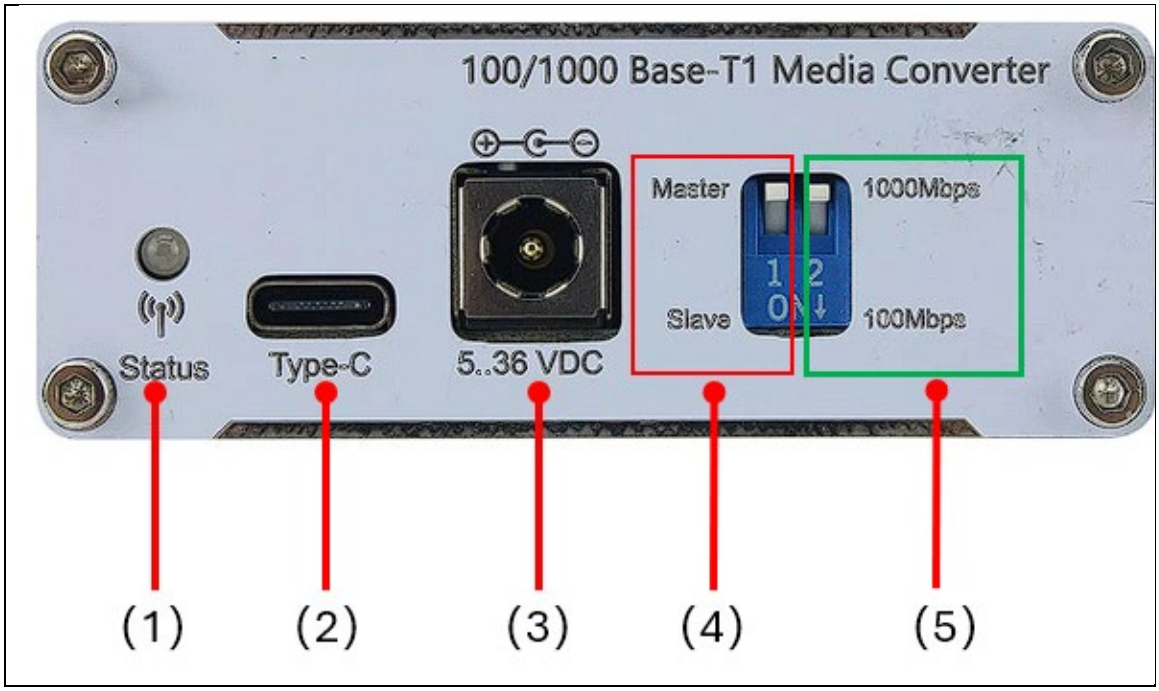

Item	Parameters	Description
1	Status Indication	T1 connection status indicator. • Light indicates a successful connection • Otherwise a failed Connection
2	Type-C Port Power Supply	5V, compatible with phone chargers • When Power from Type-C, no need to power from DC-Jack
3	DC Jack Power Supply	5-36V, 5.5*2.1mm • When Power from DC-Jack, no need to power from type-c port
4	Master/Slave Selection	Master/Slave working mode selection • One has to be set as Master, the other has to be set as Slave when connection
5	100Mbps/1000Mbps Selection	Working mode Selection • 1000Mbps • 100Mbps

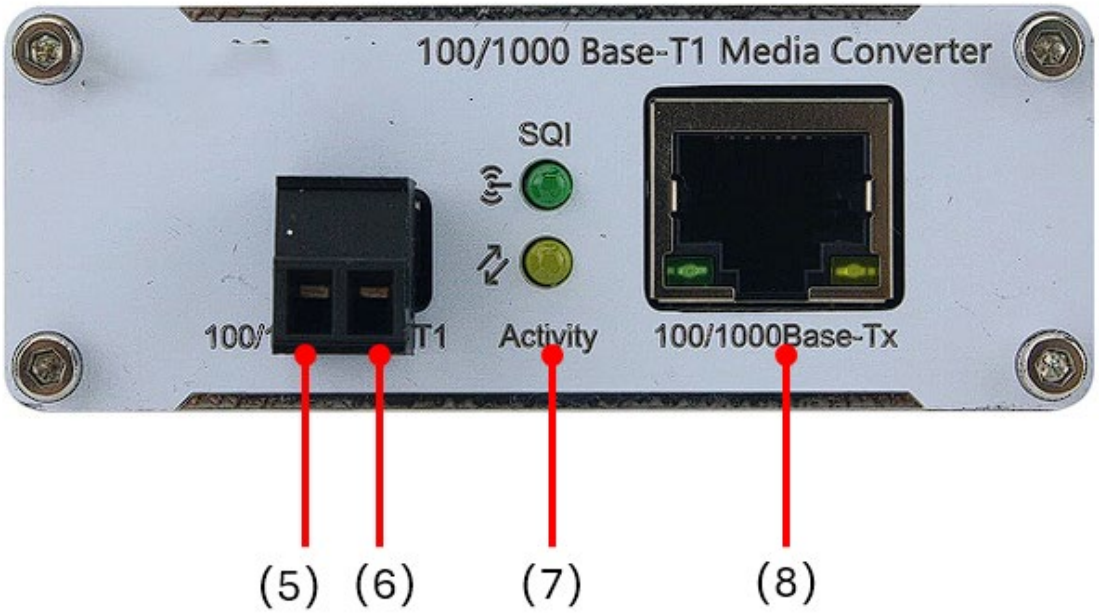

Item	Parameters	Description
5	15EDGK-3.81mm left	100/1000Base-T1 Port **TRX_P +** • Adaptive Support
6	15EDGK-3.81mm Right	100/1000Base-T1 Port **TRX_N -** • Adaptive Support
7	SQI	Signal Quality Indicator • A constantly light signal indicates full signal strength. • The duty cycle is used to indicate communication quality.
	Activity	Rx/Tx Indicator • Led flashing when data transmission
8	100/1000Base-Tx	1000Mbps Tx, RJ45 Port

2.3 15EDGK-3.81mm

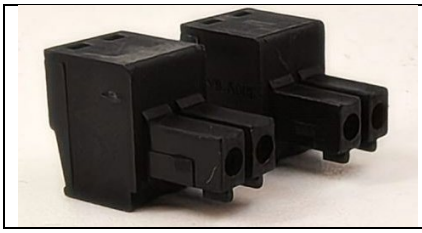	Part Number 15EDGK-3.81mm-2P

2.4 TE MATE net Adapter Board

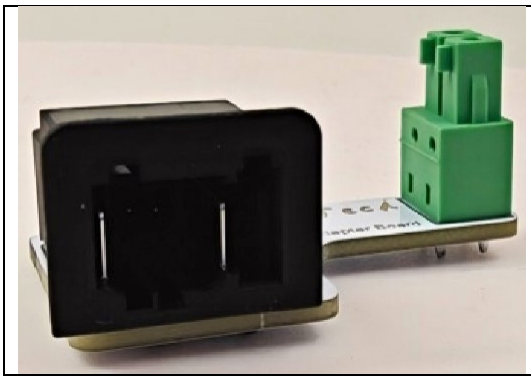	TE Part Number: 2304372-1

Pin	Description
1	TRX_P
2	TRX_N

2.5 H-MTD Adapter Board

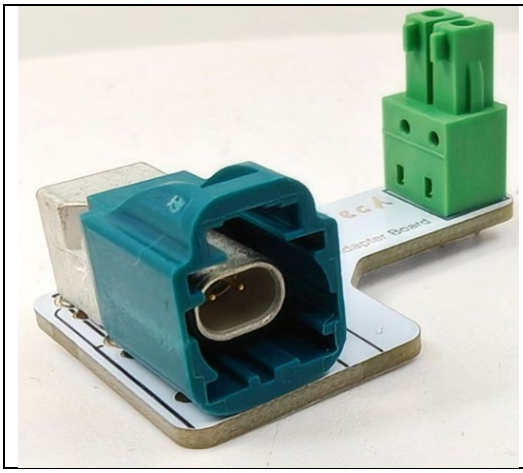	Part Number: E6S20A-40MT5-Z

2.6 Usage Connection Figure

Usage Connection Figure

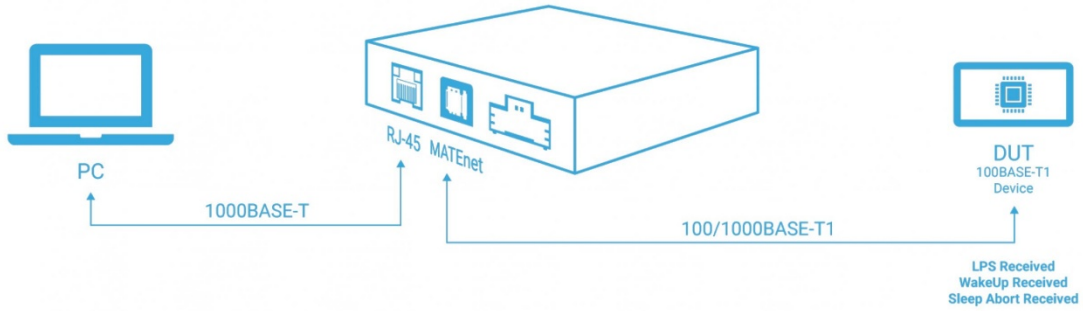

3 Connection Diagram

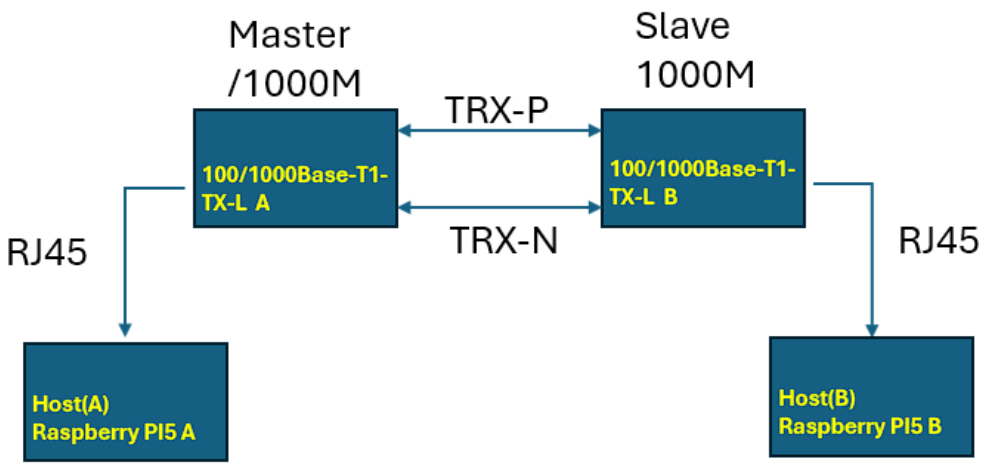

Note:
There must be one device set as Master, Another One set as Slave.
Both of the devices should set to the same Speed.

4 User Guide for Linux Os

We use 2 Raspberry PI5, one as client(Master) and one as server(Slave)

Hardware connection as chapter 3.

4.1 Install iperf3

Open terminal window of both raspberry pi5.

```
sudo apt-get install iperf3
```

Note: Do not choose iperf3 as a daemon automatically.
Or it will fail when *you run next boot.*

Download python scripts from our github.

```
sudo git clone https://github.com/buelec-tech/100-1000Base-T1-TX-L
```

4.2 Turn off WI-FI

4.3 Set IP And Ping

Host A As Client (190.19.1.9**), Host B As Server (**190.19.1.90**)**

Host A (Raspberry PI5 A), Client	Host B (Raspberry PI5 B), Server
sudo ifconfig eth0 down sudo ifconfig eth0 190.19.1.9 sudo ifconfig eth0 up	sudo ifconfig eth0 down sudo ifconfig eth0 190.19.1.90 sudo ifconfig eth0 up

Open **Host A** Terminal window, run below command check if network connected.

```
sudo ping eth0 -i 190.19.1.90
```

- If work, then go ahead with chapter 4.4
- If it does not work, re-check connection follow chapter3

4.4 TCP Test

Open Host B (190.19.1.90) Terminal, Set as server

```
sudo iperf3 -s
```

Note: if your system does not install iperf3, follow chapter 4.1

Open Host A (190.19.1.9) Terminal, send data.

```
sudo iperf3 -c 190.19.1.90 -n 8000M -i 30
```

```
Connecting to host 190.19.1.90, port 5201
[  5] local 190.19.1.9 port 48790 connected to 190.19.1.90 port 5201
[ ID] Interval           Transfer     Bitrate         Retr  Cwnd
[  5]   0.00-30.00  sec  3.27 GBytes   937 Mbits/sec    0    518 KBytes
[  5]  30.00-60.00  sec  3.27 GBytes   936 Mbits/sec    0    518 KBytes
[  5]  60.00-71.63  sec  1.27 GBytes   937 Mbits/sec    0    518 KBytes
- - - - - - - - - - - - - - - - - - - - - - - - -
[ ID] Interval           Transfer     Bitrate         Retr
[  5]   0.00-71.63  sec  7.81 GBytes   937 Mbits/sec    0             sender
[  5]   0.00-71.64  sec  7.81 GBytes   937 Mbits/sec                  receiver
```

4.4 UDP Test

Open Host B (190.19.1.90) Terminal, Set as server

```
sudo iperf3 -s
```

Open Host A (190.19.1.9) Terminal , Set as client and send data.

```
sudo iperf3 -c 190.19.1.90 -u -b 8000M -l 8k -n 1000M
```

```
Connecting to host 190.19.1.90, port 5201
[  5] local 190.19.1.9 port 38178 connected to 190.19.1.90 port 5201
[ ID] Interval           Transfer     Bitrate         Retr  Cwnd
[  5]   0.00-30.00  sec  3.27 GBytes   937 Mbits/sec    0    544 KBytes
[  5]  30.00-60.00  sec  3.27 GBytes   937 Mbits/sec    0   1.37 MBytes
[  5]  60.00-71.63  sec  1.27 GBytes   936 Mbits/sec    0   1.37 MBytes
- - - - - - - - - - - - - - - - - - - - - - - - -
[ ID] Interval           Transfer     Bitrate         Retr
[  5]   0.00-71.63  sec  7.81 GBytes   937 Mbits/sec    0             sender
[  5]   0.00-71.63  sec  7.81 GBytes   936 Mbits/sec                  receiver

iperf Done.
```

5 User Guide for Windows

We use 2 windows computers, one as client(Master) and one as server(Slave)

Hardware connection as chapter 3.

5.1 Install iperf3

Download from our github link:

https://github.com/buelec-tech/100-1000Base-T1-TX-L unzip iperf3.6_64bit.zip

5.2 Turn off firewalls

5.3 Set IP And Ping

Computer A IP,Client	Computer B IP ,Server

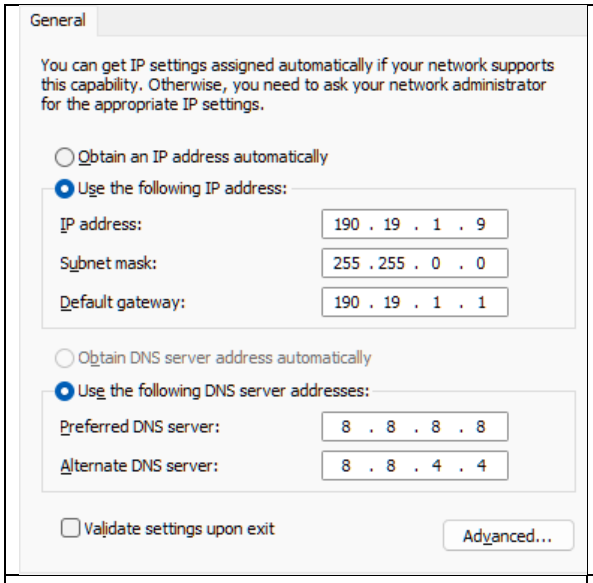

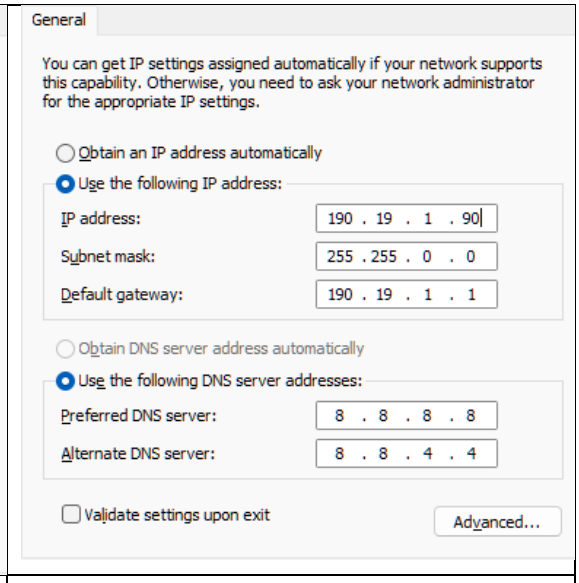

190.19.1.9 255.255.0.0 190.19.1.1 8.8.8.8 8.8.4.4	190.19.1.90 255.255.0.0 190.19.1.1 8.8.8.8 8.8.4.4

Open Terminal (Admin) on Computer A, Switch to the iperf3 directory

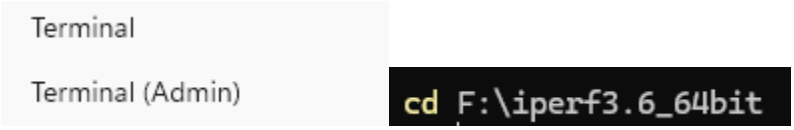

ping -i 190.19.1.9 190.19.1.90 # ping from 190.19.1.9(client)

```
PS F:\iperf3.6_64bit> ping -i 190.19.1.9  190.19.1.90

Pinging 190.19.1.90 with 32 bytes of data:
Reply from 190.19.1.90: bytes=32 time=2ms TTL=128
Reply from 190.19.1.90: bytes=32 time=2ms TTL=128
Reply from 190.19.1.90: bytes=32 time=2ms TTL=128
Reply from 190.19.1.90: bytes=32 time=3ms TTL=128

Ping statistics for 190.19.1.90:
    Packets: Sent = 4, Received = 4, Lost = 0 (0% loss),
Approximate round trip times in milli-seconds:
    Minimum = 2ms, Maximum = 3ms, Average = 2ms
```

5.4 100M Test

Open Host B (190.19.1.90) Terminal, Set as server

.\iperf3.exe -B 190.19.1.90 -s	**# Host B listen**

Open Host A (190.19.1.9) Terminal, Set as client and send data.

.\iperf3.exe -c 190.19.1.90 -B 190.19.1.9 -w 100M -t 10	**# Host A send data**

```
PS F:\iperf3.6_64bit> .\iperf3.exe -c 190.19.1.90 -B 190.19.1.9 -w 100M -t 10
warning: Ignoring nonsense TCP MSS 0
Connecting to host 190.19.1.90, port 5201
[  5] local 190.19.1.9 port 9557 connected to 190.19.1.90 port 5201
[ ID] Interval           Transfer     Bitrate
[  5]   0.00-1.00   sec   111 MBytes   933 Mbits/sec
[  5]   1.00-2.00   sec  11.2 MBytes  94.4 Mbits/sec
[  5]   2.00-3.00   sec  11.4 MBytes  95.3 Mbits/sec
[  5]   3.00-4.00   sec  11.4 MBytes  95.5 Mbits/sec
[  5]   4.00-5.00   sec  11.2 MBytes  94.4 Mbits/sec
[  5]   5.00-6.00   sec  11.4 MBytes  95.3 Mbits/sec
[  5]   6.00-7.00   sec  11.2 MBytes  94.4 Mbits/sec
[  5]   7.00-8.00   sec  11.4 MBytes  95.5 Mbits/sec
[  5]   8.00-9.00   sec  11.2 MBytes  94.4 Mbits/sec
[  5]   9.00-10.00  sec  11.4 MBytes  95.4 Mbits/sec
- - - - - - - - - - - - - - - - - - - - - - - - -
[ ID] Interval           Transfer     Bitrate
[  5]   0.00-10.00  sec   213 MBytes   179 Mbits/sec                  sender
[  5]   0.00-10.13  sec   114 MBytes  94.6 Mbits/sec                  receiver
```

5.4 1000M Test

Open Host B (190.19.1.90) Terminal, Set as server

.\iperf3.exe -B 190.19.1.90 -s	**# Host B listen**

Open Host A (190.19.1.9) Terminal, Set as client and send data.

.\iperf3.exe -c 190.19.1.90 -B 190.19.1.9 -w 100M -t 1
 # -c <host address> ,-B <Client address >

```
PS F:\iperf3.6_64bit> .\iperf3.exe -c 190.19.1.90 -B 190.19.1.9 -w 100M -t 1
warning: Ignoring nonsense TCP MSS 0
Connecting to host 190.19.1.90, port 5201
[  5] local 190.19.1.9 port 3499 connected to 190.19.1.90 port 5201
[ ID] Interval           Transfer     Bitrate
[  5]   0.00-1.00   sec   115 MBytes   962 Mbits/sec
- - - - - - - - - - - - - - - - - - - - - - - - -
[ ID] Interval           Transfer     Bitrate
[  5]   0.00-1.00   sec   115 MBytes   962 Mbits/sec                  sender
[  5]   0.00-1.03   sec  14.8 MBytes   120 Mbits/sec                  receiver
```

6 Packing List

- 1 x Automotive Ethernet converter
- 1 x 12V 1A power adapter
- 1 x 1.5m/4.9ft RJ45 network cable
- 1 x 15EDG 3.81mm terminal block
- 1 x TE MATE net Adapter Board
- 1 x H-MTD Adapter Board